Dragstalgia

S/CHARGED OUTLAWS

TSI RACENET SYSTEM
PROGRESSIVE LADDER FOR 20 CARS

09/07/2023
17:22:29

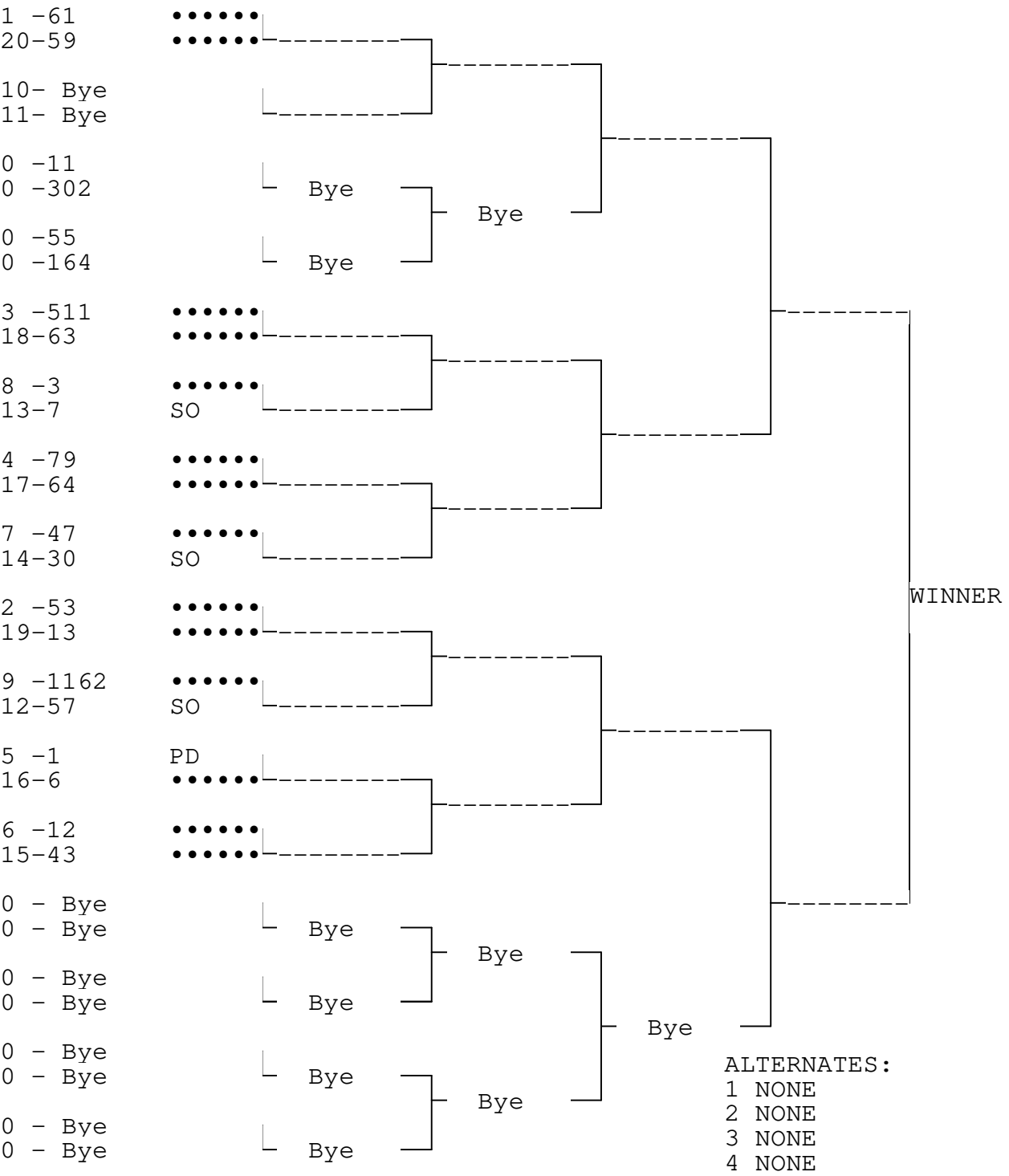

ALTERNATES:
1 NONE
2 NONE
3 NONE
4 NONE